PARTS MANUAL

BALE KING

VORTEX 3110

BALE KING GREEN & DEGELMAN BALE KING YELLOW

MODELS

BRIDGEVIEW

MANUFACTURED BY: BRIDGEVIEW MANUFACTURING INC.
P.O. BOX 4
GERALD, SASK. CANADA
S0A 1B0
PHONE: (306) 745-2711
FAX: (306) 745-3364

TABLE OF CONTENTS

BALE KING VORTEX 3110

EXTERNAL PARTS AND CONTROLS..……....…….. 1 - 5

SWITCH……..……5A

HUB ASSEMBLY…….……6

PTO ASSEMBLIES…….…….....….. 7 - 12

INNER TUB PARTS……..…….....13 - 14

HYDRAULIC ASSEMBLIES……15 - 16

HYDRAULIC SCHEMATICS…...…….……..... 17 – 18

RIGHT HAND GEARBOX……19 - 20

FINE CHOP OPTION (SIDE MOUNT)..……21

MODELS WITH SERIAL # BK3102 AND BELOW

FINE CHOP OPTION (BOTTOM MOUNT)……22

SPRING ASSISTED DEFLECTOR……...……23 – 24

HYDRAULIC SCHEMATICS……25 - 26

OPTIONAL ATTACHMENTS……27 - 28

EXTERNAL PARTS AND CONTROLS

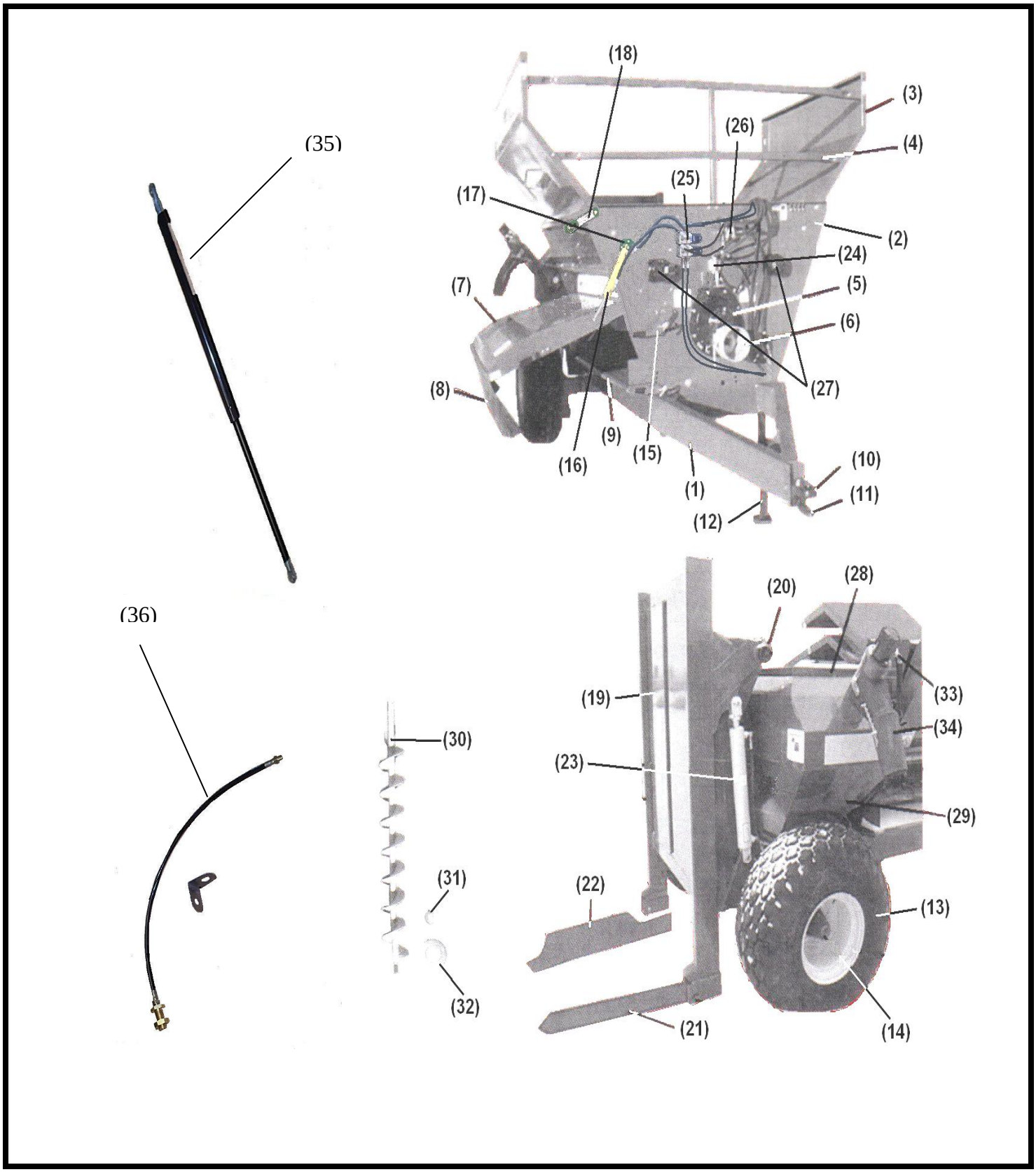

EXTERNAL PARTS AND CONTROLS

PARTS LIST

Ref#	BMI# GREEN	YELLOW	Description	Qty.
1	N/A		Main Frame	2
2	N/A		Tub Assembly	1
3	10440	17856	Top Bale Shield	2
Not Shown	14461		1/2” x 1 1/2” NC Bolt (+2 for Serial#BK3102 and below)	6
Not Shown	16345		1/2” Flat Washer (+2 for Serial#BK3102 and below)	6
Not Shown	10278		1/2” Serrated Flange Nut (+2 for Serial#BK3102 and below)	6
4	10503		Front Rack (for Serial #BK3184 and below)	1
4	12903	17600	Front Rack (for Serial #BK3184 and above)	1
Not Shown	14460		1/2” x 1” NC Bolt	2
Not Shown	10278		1/2” Serrated Flange Nut	6
Not Shown	15403		1/2” x 3 1/4” NC Bolt	4
Not Shown	16345		1/2” Flat Washer	4
5	10420		Right Hand Gearbox (See Page 19)	1
Not Shown	14461		1/2” x 1 1/2” NC Bolt (Bondioli)	8
Not Shown	15403		1/2” x 1 3/4” NC Bolt (Star)	8
Not Shown	10278		1/2” Serrated Flange Nut	8
6	10421		PTO Shield	1
Not Shown	13806		3/8” x 1” NC Bolt	4
Not Shown	13773		3/8” Flat Washer	4
Not Shown	13802		3/8” NC Locknut	4
7	10478		Side Deflector (Spring Assist Style)	1
7	12814	17597	Side Deflector (Hydr. Lift Style)	1
Not Shown	12815	17598	Deflector Mounts	2
Not Shown	13806		3/8” x 1” NC Bolt	6
Not Shown	13772		3/8” Flat Washer	6
Not Shown	11818		3/8” Serrated Flange Nut	6
Not Shown	10288	17601	Channel Rubber Deflector	1
8	10477		Rubber Deflector 18”	1
Not Shown	13806		3/8” x 1”NC Bolt	8
Not Shown	13802		3/8” NC Locknut	8
9	10825		Bottom Deflector	1
Not Shown	11662		5/16” x 3/4” Carriage Bolt	6
Not Shown	11815		5/16” Serrated Flange Nut	6
Not Shown	14461		1/2” x 1 1/2” NC Bolt	2

Ref#	BMI# GREEN	YELLOW	Description	Qty.
Not Shown	14443		1/2” NC Locknut	2
Not Shown	16345		1/2” Fender Washer	2
Not Shown	10239		Deflector Bushing	2
Not Shown	13806		3/8” x 1” NC Bolt	2
Not Shown	11818		3/8” Serrated Flange Nut	2
Not Shown	10231		Plated S-Handle	1
Not Shown	10301		Compression Spring	1
Not Shown	10302		Roll Pin	1
Not Shown	10297		Rubber Grip	1
10	10452	17592	Tongue Hitch	1
11	10453	17593	Clevis for Tongue Hitch	1
Not Shown	10802		3/4” x 5 3/4” NC Bolt	2
Not Shown	10007		3/4” NC Locknut	2
12	10285		Implement Jack	1
13	10355		16L x 16.1 Tire	2
14	10354		W14C x 16.1 8 – Rim - Yellow	2
15	10826		Hoop Height Adjuster	1
Not Shown	13806		3/8” x 1” NC Bolt	4
Not Shown	11818		3/8” Serrated Flange Nut	4
Not Shown	10297		Rubber Handle Cover	1
Not Shown	10231		Plated S Handle	1
Not Shown	10301		Compression Spring	1
Not Shown	10302		Roll Pin	1
16	10317	17442	Deflector Hydraulic Cylinder (See Pg14)	1
Not Shown	10801		1/2” x 3 1/2” NC Bolt	1
Not Shown	15397		1/2” x 3 3/4” NC Bolt	1
Not Shown	14443		1/2” NC Locknut	2
17	10516	17594	Deflector Cylinder Mount (Front Plate)	1
Not Shown	13806		3/8” x 1” NC Bolt	4
Not Shown	11818		3/8” Serrated Flange Nut	4
Not Shown	15711	17595	Deflector Cylinder Mount (Deflector)	1
Not Shown	13806		3/8” x 1” NC Bolts	4
Not Shown	11818		3/8” Serrated Flange Nut	4
18	13560	19430	Safety Transport Link	1
Not Shown	13233		Lynch Clip	1
Not Shown	13232		1/2” x 2 1/4” NC Bolt	1
Not Shown	13231		1/2” x 2 1/2” NC Stabilizer Pin	2
Not Shown	10278		1/2” Serrated Flange Nut	6
19	10551	19206	Rear Fork Frame	1
20	10435		Pivot Pipe	1
Not Shown	10504		3” Rubber Cap	2
Not Shown	15397		1/2” x 3 3/4” NC Bolt	1
Not Shown	14443		1/2” NC Locknut	1
Not Shown	10280		1/4” Grease Zerk	2

Ref#	BMI# GREEN	YELLOW	Description	Qty.
Not Shown	10580		1/4” x 2” Cotter Pin	2
21	10303	17606	Bale Tine	2
22	10234	17602	Small Bale Tine (Optional)	2
Not Shown	10031		Headed Pin	2
Not Shown	10072		3/16” x 1 1/2” Cotter Pin	2
23	10528	17444	Fork Hydraulic Cylinder (See Page 13)	2
Not Shown	10339		Butt End Cylinder Pin	2
Not Shown	10341		Ram End Cylinder Pin	2
Not Shown	10580		1/4” x 2” Cotter Pin	8
24	11742		Splitter (See Page 17)	1
Not Shown	13761		1/4” x 2” NC Bolt	2
Not Shown	15402		1/4” NC Locknut	2
Not Shown	13763		1/4” Washer	2
25	11743		Diverter (See Page 17)	2
Not Shown	11783		5/16” x 3” Socket Head Bolt	4
Not Shown	15870		5/16” NC Locknut	4
26	10455		Flow Control (See Page 17)	1
Not Shown	13762		1/4” x 2 3/4” NC Bolt	2
Not Shown	15402		1/4” NC Locknut	2
27	11045		Hydraulic Motors (See Page 17)	2
Not Shown	16625		PTO and Hose Holder	1
Not Shown	10510		Cover Fine Chop	2
Not Shown	10807		3/8” x 3/4” Fin Bolt	8
Not Shown	11818		3/8” Serrated Flange Nut	8
Not Shown	16640		Cylinder Safety Lock	1
Not Shown	12050		PTO Clip, Safety Lock	1
28	10546	19437	Lid – Grain Tank	1
Not Shown	11813		5/16” x 1 1/4” Truss Head Bolt	4
Not Shown	15413		5/16” Flat Washer	4
Not Shown	11815		5/16” Serrated Flange Nut	4
Not Shown	15870		5/16” NC Locknut	4
Not Shown	10547		Lid Handle	1
Not Shown	13806		3/8” x 1” NC Bolt	2
Not Shown	11818		3/8” Serrated Flange Nut	2
Not Shown	13419	19439	Lid Hinge (RH)	1
Not Shown	13418	19438	Lid Hinge (LH)	1
Not Shown	13767		3/8” x 3/4” NC Bolt	4
Not Shown	11818		3/8” Serrated Flange Nut	4
Not Shown	14461		1/2” x 1 1/2” NC Bolt	2
Not Shown	16345		1/2” Fender Washer	2
Not Shown	10239		1/2” Bushing	2
Not Shown	14443		1/2” NC Locknut	2
29	10552	19436	Grain Tank	1
Not Shown	10175		1/2” x 1 1/4” NC Bolt	4

Ref#	BMI# GREEN	YELLOW	Description	Qty.
Not Shown	10278		1/2” Serrated Flange Nut	4
Not Shown	10807		3/8” x 3/4” Fin Bolt	4
Not Shown	11818		3/8” Serrated Flange Nut	4
30	10365		Auger Assembly	1
Not Shown	11817		3/8” x 2” NC Bolt	1
Not Shown	13802		3/8” NC Locknut	1
31	10366		Bearing Assembly w/Collar	1
Not Shown	10367		3/4” Lock Collar	1
32	10368		Bearing Flange	2
Not Shown	11662		5/16” x 3/4” Carriage Bolt	3
Not Shown	15408		5/16” Serrated Flange Nut	3
33	10533		Hydraulic Motor	1
Not Shown	10249		Seal Kit	1
Not Shown	11246	19440	Auger Motor Mount	1
Not Shown	14461		1/2” x 1 1/2” NC Bolt	2
Not Shown	14443		1/2” NC Locknut	2
34	10543		Auger Spout	1
Not Shown	10544		Auger Spout Strap	1
Not Shown	11662		5/16” x 3/4” Carriage Bolt	3
Not Shown	15408		5/16” Serrated Flange Nut	3
Not Shown			Vortex Decals:	
	12187		V3110	2
	12190		Bale King	2
	12231		Tank Strip	2
	12231		PIMA	1
	12519		Patent	1
		17360	Degelman Decal 8.25” x 36”	1
Not Shown			Safety Decals:	
	13822		Stand Clear	2
	12230		Danger Sign	4
	12219		Caution Sign	2
	12228		SMV	1
	13324		1 1/2” x 3” Amber Reflective Decal	3
	13325		1 1/2” x 3” Red Reflective Decal	3
	13194		Decal Transport Safety Lock (N/A before Serial #BK3103)	1
35	16808		Gas Shock- Grain Tank Lid	1
36	16855		Rear Rotor Bearing Grease Kit	1

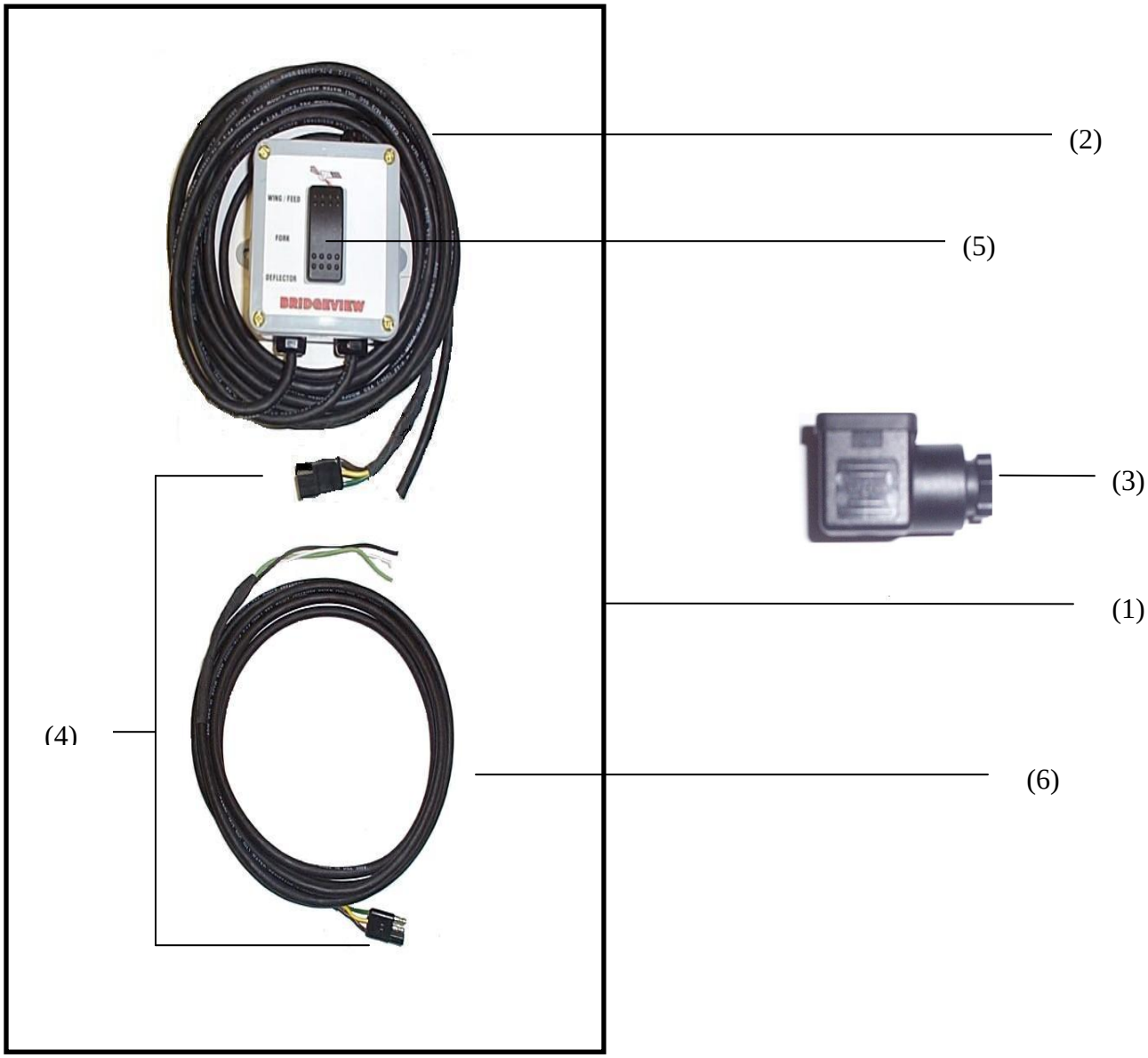

PARTS LIST

Ref #	BMI#	Description	Qty.
1	11800	Complete control box with harness for 3000 series	1
2	11793	Control box complete with cab to hitch harness all 3000 & 4000 series	1
3	13657	Square plug for divertor valve	2
4	13562	3 pin trailer plug	1
5	13561	3 way switch	1
6	11794	Harness (hitch to valve) 3000 series	1

HUB ASSEMBLY

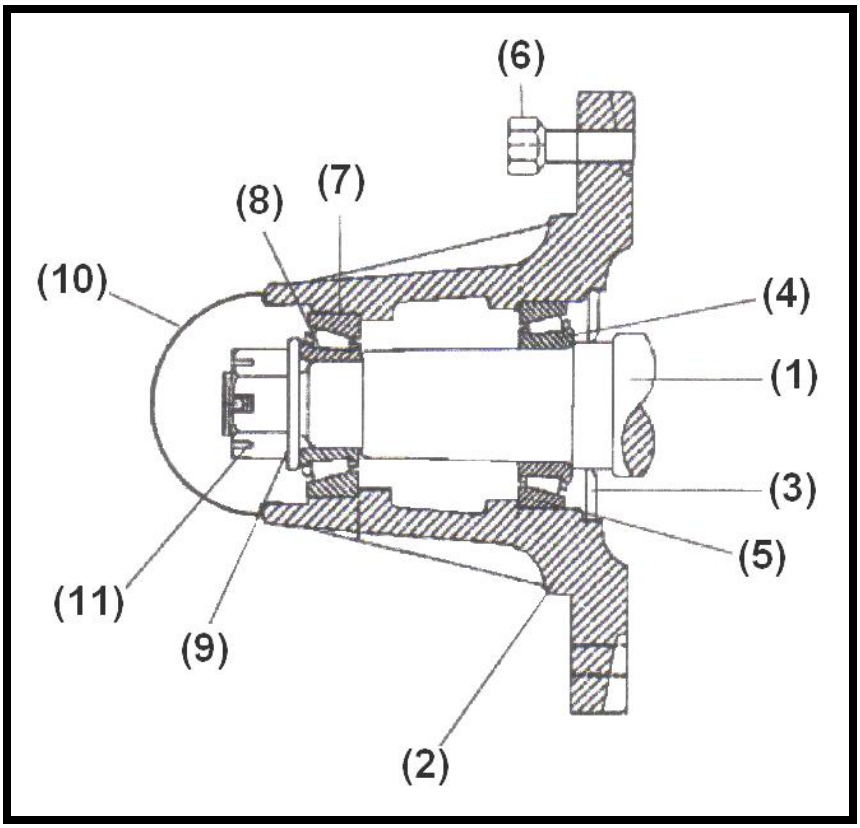

Note:Axle Repair Kit on Next Page

HUB ASSEMBLY

PARTS LIST

Ref#	BMI#	Description	Qty.
1	10342	Spindle 2.25” x 15.5”	2
2	10343	Hub 6500 Series	2
3	10344	Dirt Seal	2
4	10345	Inner Bearing Cone	2
5	10346	Inner Bearing Cup	2
6	10347	9/16” x 1 3/4” NF Wheel Stud	16
7	10348	Outer Bearing Cone	2
8	10349	Outer Bearing Cup	2
9	10071	1 1/16” x 2” Flat Washer	2
Not Shown	10072	3/16” x 1 1/2” Cotter Pin	2
10	10350	Dust Cap	2
11	10153	Castle Nut	2

Axle Repair Kit

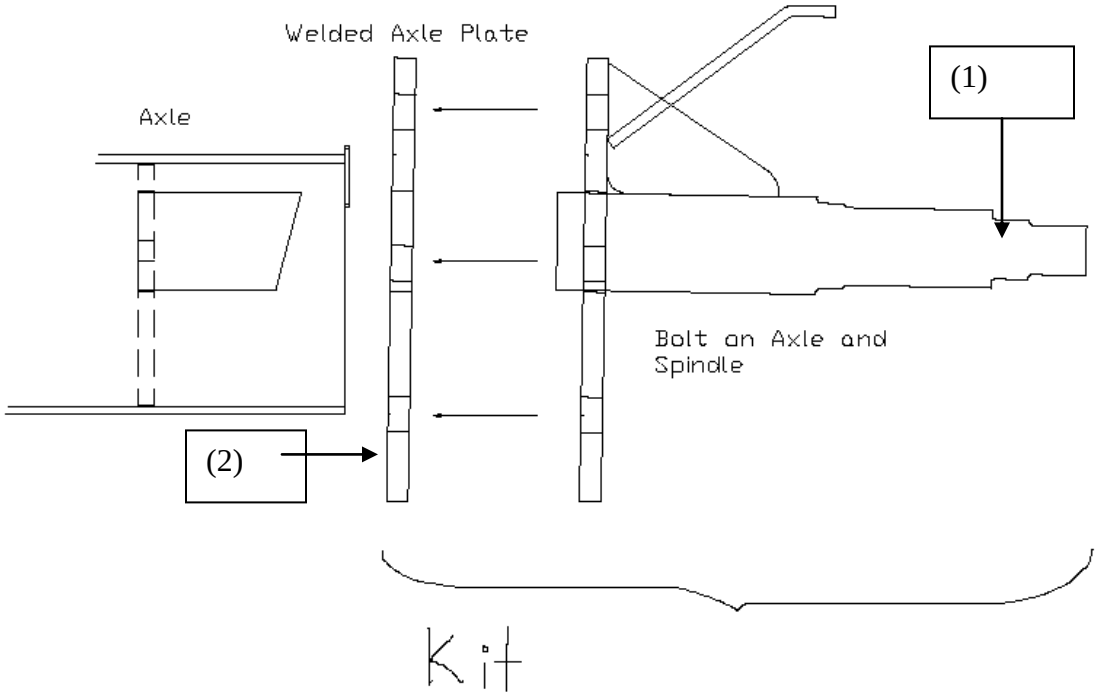

Axle Repair Kit

PARTS LIST

Ref#	BMI#		Description	Qty.
Kit	16993		Axle repair kit spindle	1
1	16807	17961	Spindle assembly	1
2	N/A		Weldment plate	1
Not Shown	13800		Bolt ¾ x 2 NC	6
Not Shown	12455		Nut ¾ NC	6
Not Shown	13795		Lock Washer ¾	6

PTO ASSEMBLY (WALTERSCHEID)
#10087

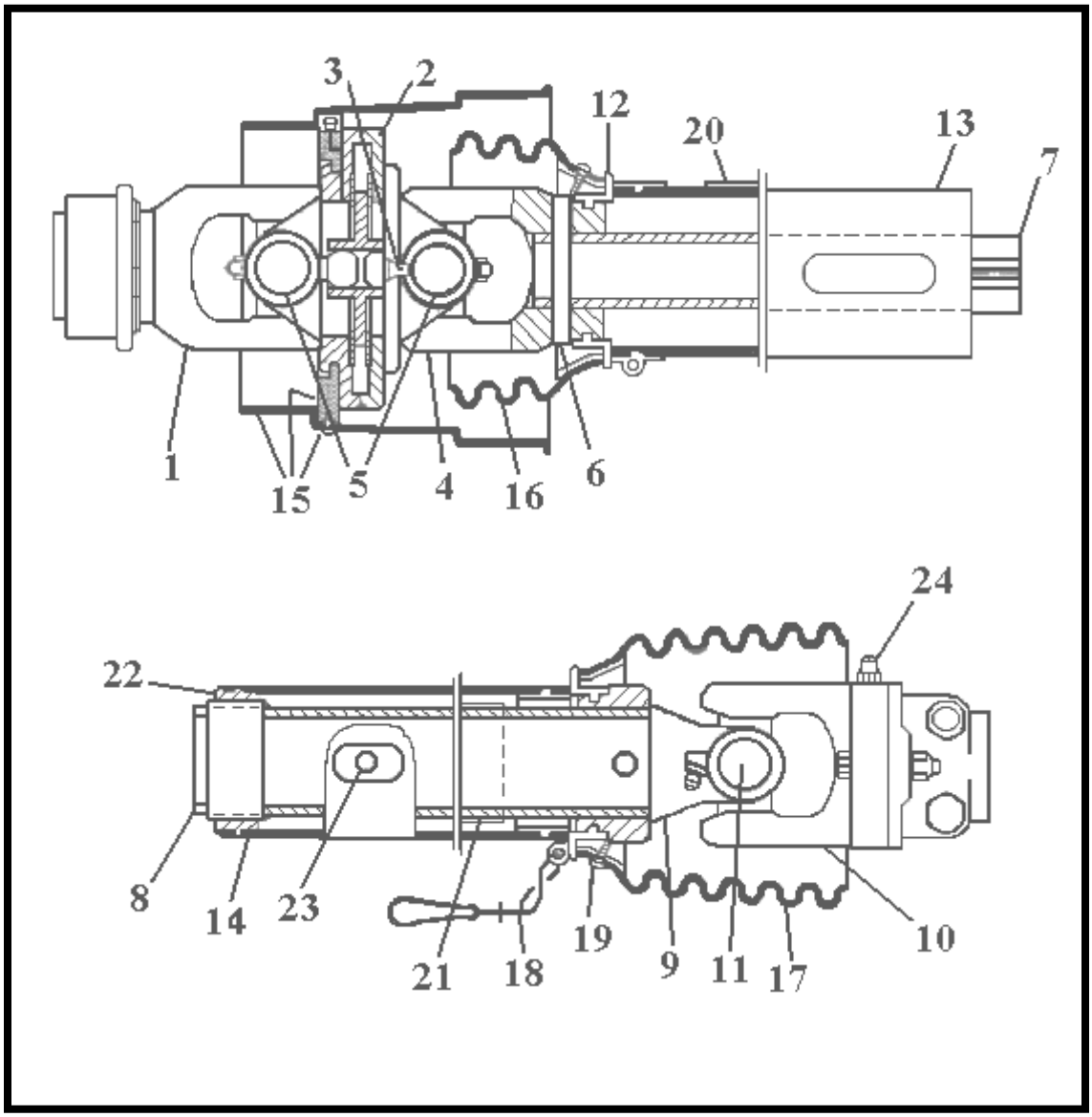

PTO ASSEMBLY (WALTERSCHEID)

PARTS LIST

Ref#	BMI#	Description	Qty.
	10087	Complete PTO Assembly	
1	10088	Yoke 1 3/8" – 21 SPL.	1
2	10090	Double Yoke	1
3	N/A	Grease Zerk (Included with item 2)	1
4	10091	Inboard Yoke 1b	1
5	10092	Cross and Bearing Kit	2
6	10093	Spring Pin	2
7	10095	Inner Profile 1bGA	1
8	10096	Profile and Sleeve W.A.	1
9	10097	Inboard Yoke 2a	1
10	10591	Shear Bolt Clutch	1
11	10094	Cross and Bearing Kit	1
12	10099	Bearing Ring SC25 Shield	2
13	10100	Outer Shield Tube, Oval Shield	1
14	10101	Inner Shield Tube, Oval Shield	1
15	10102	CV Cone and Bearing Assembly Shield	1
16	10103	Shield Cone 3 Rib	1
17	10104	Shield Cone 6 Rib	1
18	10105	Safety Chain	1
19	10108	Screw (Included with items 15, 16 ,17)	8
20	10106	Decal Outer (Included with item 13)	1
21	10107	Decal Inner (Included with item 8)	1
22	10109	Support Bearing	1
23	10110	Grease Zerk (Included with item 8)	1
24	10592	10mm Grease Zerk	10
Not Shown	10113	ASG. Col. Kit (Included with item 1)	1
Not Shown	10470	10mm x 60mm Shear Bolt	1
Not Shown	10471	10mm Locknut	1

Walterscheid: Identified by ***Accordian Style*** bell shield on machine end of PTO

PTO ASSEMBLY (BONDIOLI)
#10114

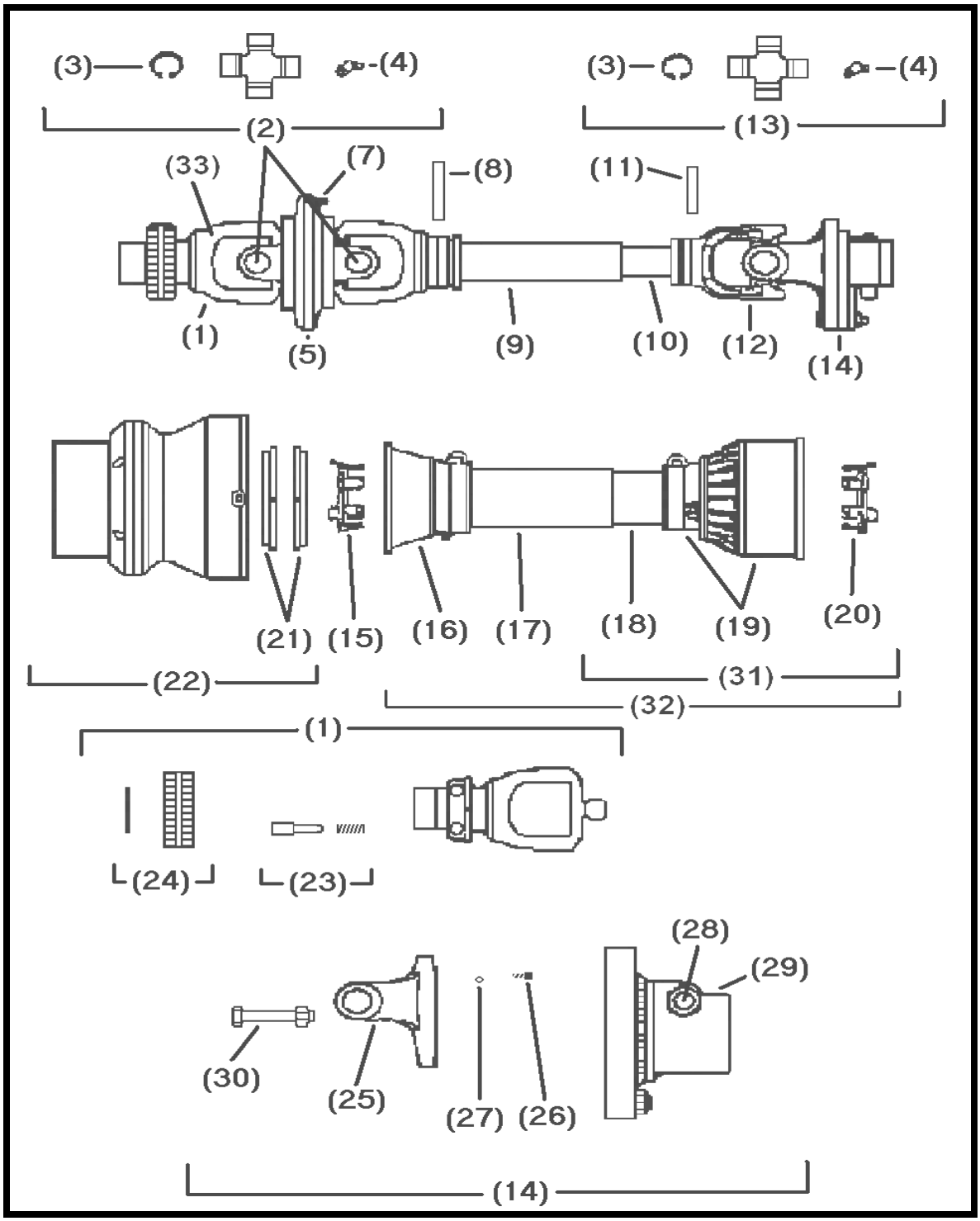

PTO ASSEMBLY (BONDIOLI)

PARTS LIST

Ref#	BMI#	Description	Qty.
	10114	Complete PTO Assembly	
1	10202	Yoke w/Bridge (Sliding Collar) 1 3/8”	1
2	10116	U-Joint Cross Kit	2
3	N/A	Circlip (Included with Cross Kit)	8
4	N/A	Grease Zerk (Included with Cross Kit)	2
5	10119	Central Body CV Joint	1
6	10120	Yoke	1
7	10121	Grease Zerk	1
8	10122	Roll Pin	1
9	10123	Cardan Tube	1
10	10124	Cardan Tube CM	1
11	10125	Roll Pin	1
12	10126	Inner Tube Yoke	1
13	10127	U-Joint Cross Kit	1
14	13703	Torque Limiter (Quick Pin Style)	1
15	10129	Shield Support 6-7	1
16	10130	Safety Cone	1
17	10131	CM Safety Tube	1
18	10132	SM Safety Tube	1
19	10133	I Cone Sets F5-6-7	1
20	10134	Shield Support 6-7	1
21	10135	Ring Nut Dowell	1
22	10136	Complete Shell	1
23	10137	Complete Push Bottom	1
24	10138	Hub	1
25	N/A	Yoke (Included w/item 13703)	1
26	10140	Grease Zerk	1
27	10141	Ball 5/16	1
28	N/A	Nut Sold with Item #29	1
29	10406	Wedge Lock on machine Yoke	1
30	10407	Shear Bolt (Pkg. of 5)	1
31	10150	Half Shaft Shield (Impl. end)	1
32	10151	Safety Shield – Complete	1
33	10152	Yoke 1 3/4” 20-Spline	1

PTO ASSEMBLY (BONDIOLI)
#12574

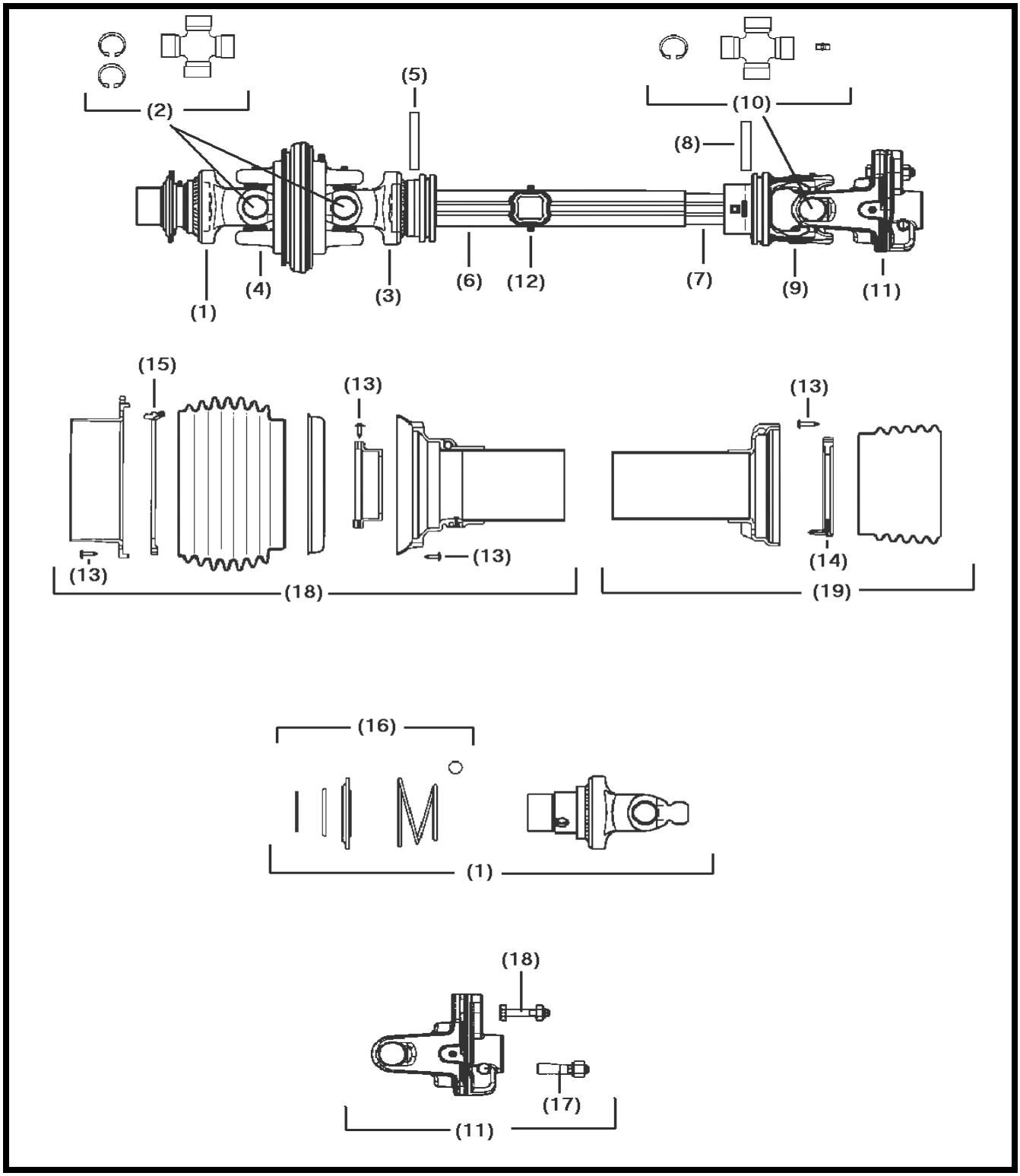

PTO ASSEMBLY (BONDIOLI)

PARTS LIST

Ref#	BMI#	Description	Qty.
	12574	Complete PTO Assembly	
1	13564	Yoke	1
2	13563	U-Joint Cross Kit	2
3	13568	Yoke	1
4	13565	CV Body	1
5	10122	Flexible Pin	1
6	13566	Cardan Tube	1
7	13567	Inner Cardan Tube	1
8	10125	Flexible Pin	1
9	13569	Yoke	1
10	13022	U-Joint Cross Kit	1
11	13570	LB Torque Limiter	1
12	13571	Grease Zerk	2
13	13572	Shield Screw	17
14	13609	Ring for Inner Cone	1
15	13610	Laufring for Front CV	1
16	13575	Lock Assembly Front CV	1
17	13577	Wedge Lock	1
18	13576	Shear Bolt	1
19	13573	Shield Assembly – Outer	1
20	13574	Shield Assembly – Inner	1

Weasler PTO SHAFT 17388

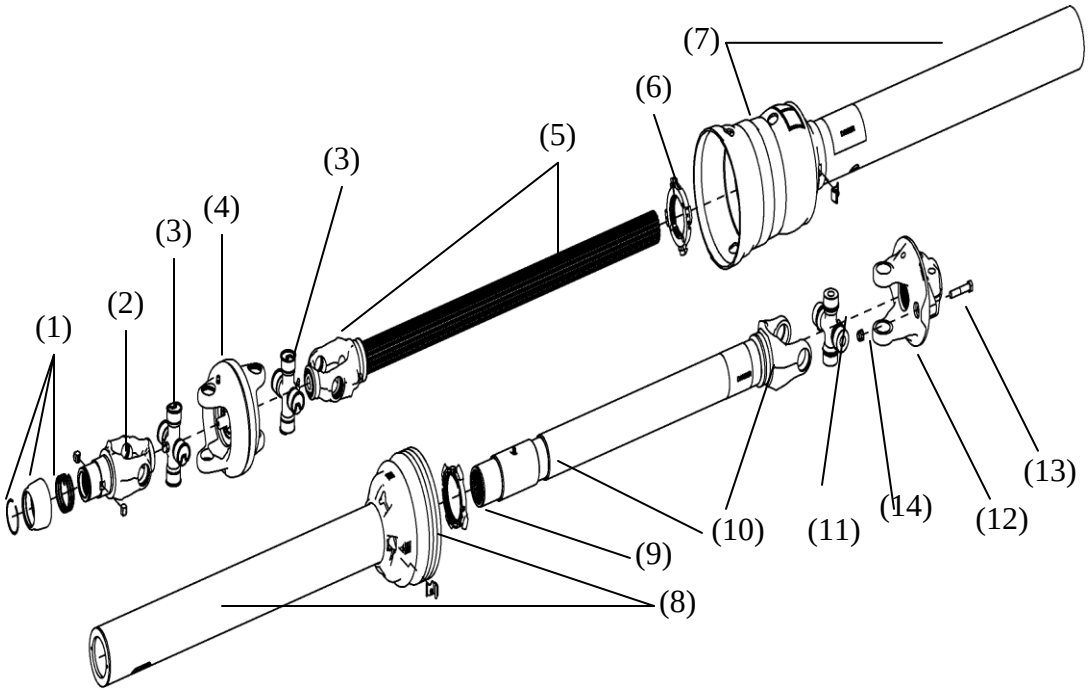

PTO ASSEMBLY (WEASLER)

Ref #	BMI #	Decription	Qty.
	17388	Complete PTO Assembly	1
1	17567	Safety Slide Lock Repair Kit	1
2	17568	Safety Slide Lock Yoke 1 3/8- 21 spline	1
3	17569	CV Cross & Bearing Kit	2
4	17570	CV Center Housing	1
5	17582	Yoke & Shaft Assy. Tractor Side	1
6	17571	Guard Repair Kit Tractor Side	1
7	17583	Outer Guard Assy Tractor Side (Item #6 incl)	1
8	17585	Inner Guard Assy Impl. Side (Item #9 incl)	1
9	17572	Guard Repair Kit Impl. Side	1
10	17584	Yoke & Tube Assy Impl. Side	1
11	17573	Cross & Bearing Kit	1
12	17581	Shear Assy.	1
13	11817	Shear Bolt 3/8 X 2 NC	1
14	17586	Nut 3/8 Lock Nut	1
15	17886	Safety Slide Lock Yoke Assy. 1 3/4 - 20 Spline	1

INNER TUB PARTS

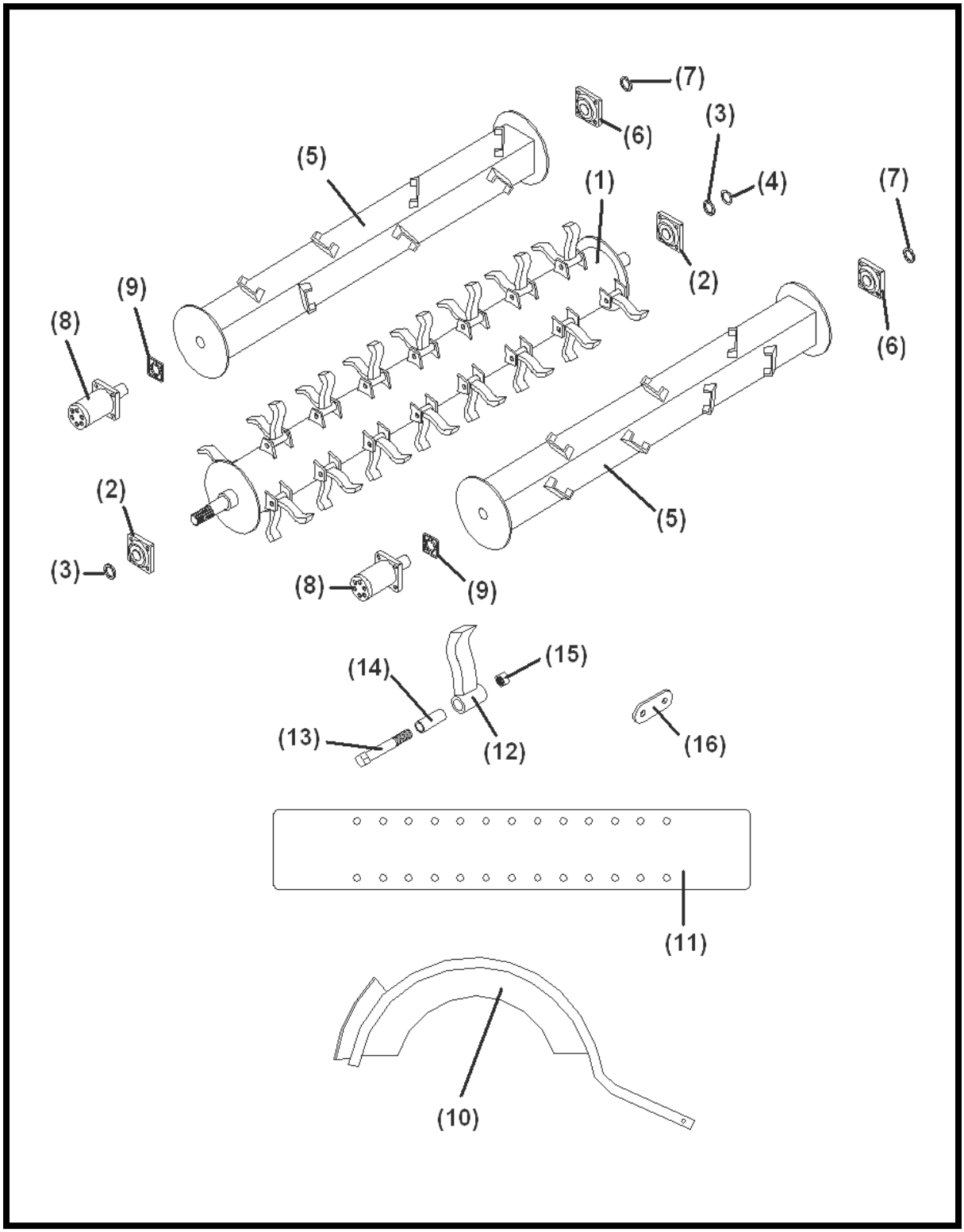

INNER TUB PARTS

PARTS LIST

Ref#	BMI# GREEN	YELLOW	Description	Qty.
	13538	17401	10” Rotor	1
1	13542		8” Rotor	1
2	10221		1 15/16” Rotor Bearings	2
Not Shown	10270		1/8” NPT Grease Zerk	2
Not Shown	10274		5/8” x 1 3/4” NF Bolt	8
Not Shown	15398		5/8” Flange Locknut	8
Not Shown	10477		Right Hand Rotor Support	1
Not Shown	15399		7/16” x 2 3/4” NC Bolt	4
Not Shown	10799		7/16” Locknut	4
Not Shown	10229	17602	Rotor & Beater Twine Guard	6
Not Shown	13806		3/8” x 1” NC Bolt	24
Not Shown	11818		3/8” Serrated Flange Nut	16
Not Shown	13802		3/8” Locknut	4
Not Shown	13772		3/8” Flat Washer	2
3	10268		1 15/16” Lock Collar	2
4	10227		Split Collar	1
5	12802	17603	Beaters	2
6	10038		1 3/4” Bearings (Beaters)	2
Not Shown	10270		1/8” NPT Grease Zerk	2
Not Shown	14461		1/2” x 1 1/2” NC Bolt	8
Not Shown	10278		1/2” Serrated Flange Nut	8
7	10040		1 3/4” Lock Collar	2
8	10045		Hydraulic Beater Motors (See Page 17)	2
Not Shown	10172		1/2” x 2 1/2” NC Socket Head bolt	8
Not Shown	10183		1/2” Lock Washer	8
Not Shown	10278		1/2” NC Serrated Flange Nut	8
9	10021		Coupler Assembly	2
10	10463	17604	Hoop	11
Not Shown	13769		3/8” x 2 1/4” NC Bolt	11
Not Shown	13806		3/8” x 1” NC Bolt	22
Not Shown	13802		3/8” NC Locknut	33
11	10514	17605	Charging Panel	1
12	10223		Flail for 8” Rotor (Replace in Pairs)	30
	10220	17460	Flail for 10” Rotor	30
13	10443		Shoulder Bolt	30
14	10005		Flail Bushing	30
15	10007		3/4” NC Locknut	30
16	10513	19431	Hoop Adjustment Shackle	2
Not Shown	14461		1/2” x 1 1/2” NC Bolt	4
Not Shown	16345		1/2” Fender Washer	4
Not Shown	10239		1/2” Bushing	4
Not Shown	14443		1/2” NC Locknut	4

HYDRAULIC CYLINDER (FORKS) 1 1/2” SHAFT

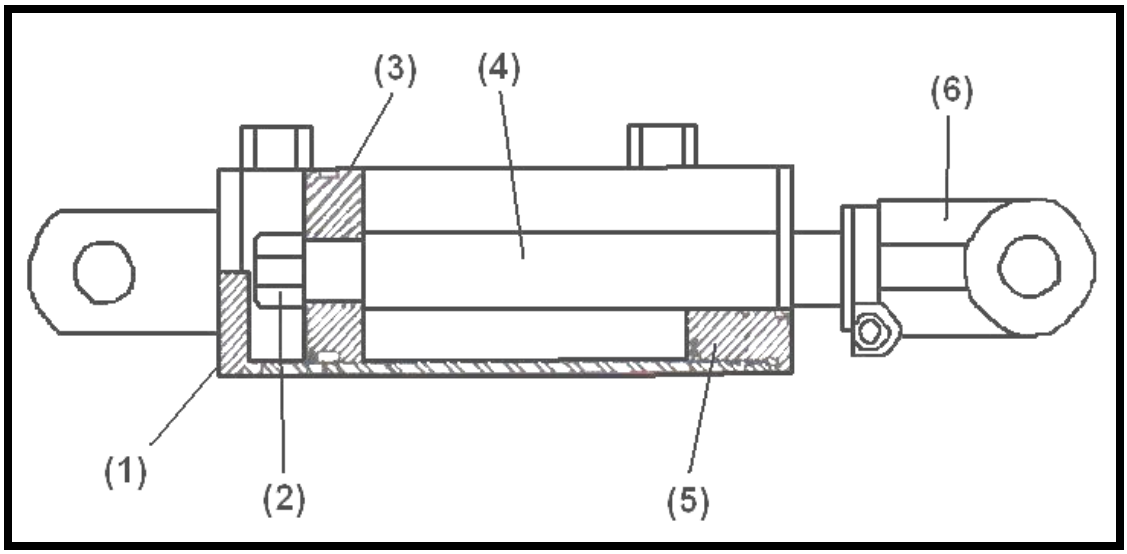

HYDRAULIC CYLINDER (FORKS) 1 1/2” SHAFT

PARTS LIST

Ref#	BMI#		Description	Qty.
	12865	17444	Hydraulic Cylinder Assembly	
1	10535		Barrel Assembly w/Clevis	1
2	10062		Locknut Piston Rod	1
3	12875		Piston	1
4	12873	17612	Cylinder Shaft	1
5	12874		Gland	1
6	10061		Clevis	1
Not Shown	12872	17611	Seal Kit	1

HYDRAULIC CYLINDER (DEFLECTOR)

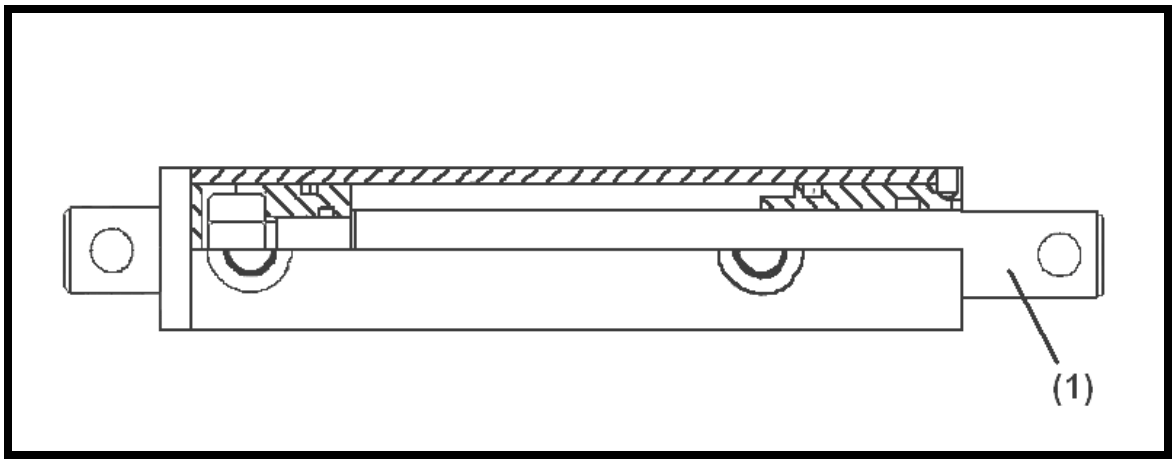

HYDRAULIC CYLINDER (DEFLECTOR)

PARTS LIST

Ref#	BMI#		Description	Qty.
	10317	**17442**	**Hydraulic Cylinder Assembly**	**1**
1	**16746**	**17614**	**1” Cylinder Shaft**	**1**
Not Shown	**10318**	**17613**	**Seal Kit**	**1**

HYDRAULIC SCHEMATICS

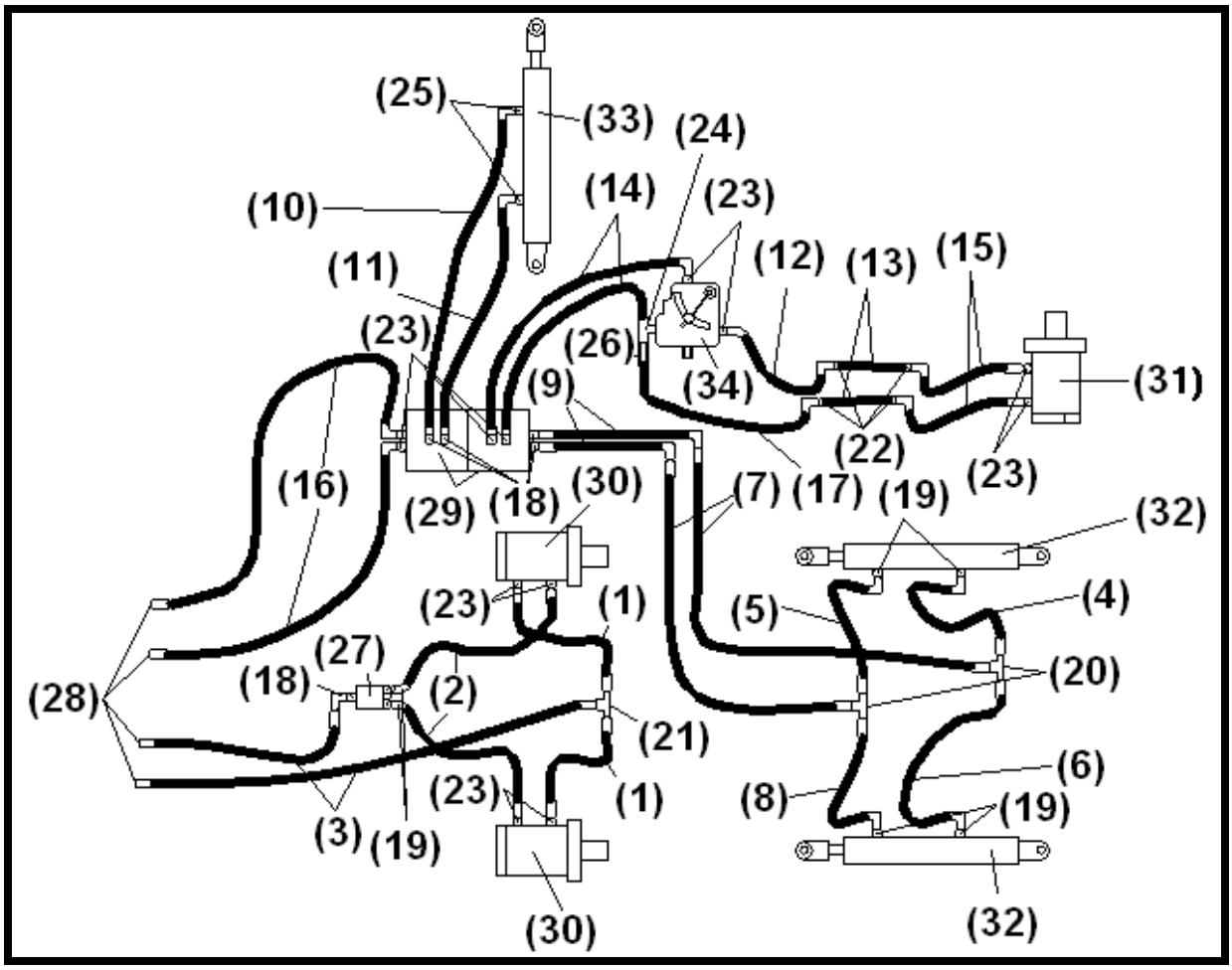

PARTS LIST

Ref#	BMI#	Description	Qty.
1	11724	Hose – 17” OAL, 6FJX – 8FJX	2
2	11726	Hose – 21” OAL, 6FJX45 – 8FJX	2
3	11727	Hose – 102” OAL, 6FJX90 – 8MP	2
4	11729	Hose – 78” OAL, 6FJX45 – 6FJX	1
5	11730	Hose – 98” OAL, 6FJX90 – 6FJX	1
6	11731	Hose – 52” OAL, 6FJX45 – 6FJX	1
7	10190	Hose – 80” OAL, 6FJX – 6FJX	2
8	11732	Hose – 68” OAL, 6FJX90 – 6FJX	1
9	10194	Hose – 54” OAL, 6FJX – 6FJX	2
10	11733	Hose – 29” OAL, 6FJX90 – 6FJX90	1
11	11734	Hose – 23” OAL, 6FJX90 – 6FJX90	1

Ref#	BMI#		Description	Qty.
12	10431		Hose – 35” OAL, 8FJX45 – 8FJX	1
13	10432		Hose – 82” OAL, 8FJX – 8FJX	2
14	11744		Hose – 32” OAL, 8FJX90 – 8FJX	2
15	10532		Hose – 92” OAL, 8FJX45 – 8FJX	2
16	10429		Hose – 102” OAL, 8FJX90 – 8MP	2
17	10430		Hose – 39” OAL, 8FJX45 – 8FJX	1
18	11739		Adapter – 10MB – 6MJ	5
19	11740		Adapter – 8MB – 6MJ	6
20	10188		Adapter – 6MJBH – 6MJT	3
21	10187		Adapter – 6MJ – 6MJ90BH	2
22	10531		Adapter – 8MJBH – 8MJ90	4
23	10161		Adapter – 10MB – 8MJ	12
24	10530		Adapter – 10MBL – 8MB – 8MJT	1
25	10162	17436	Adapter – 6MB – 6MJ	2
26	12171		Check Valve, 8FB – 8MJ	1
27	11742		Splitter	1
28	10167	17379	Pioneer Tips	4
29	11743		Diverter	2
30	10045		Hydraulic Beater Motors	2
Not Shown	10048		Seal Kit	1
31	10533		Auger Motor	1
Not Shown	10249		Seal Kit	1
32	10528	17444	Fork Hydraulic Cylinders (See Pg17)	2
33	10317	17441	Deflector Hydraulic Cylinder (See Pg18)	1
34	10455		Flow Control	1

RIGHT HAND GEARBOX

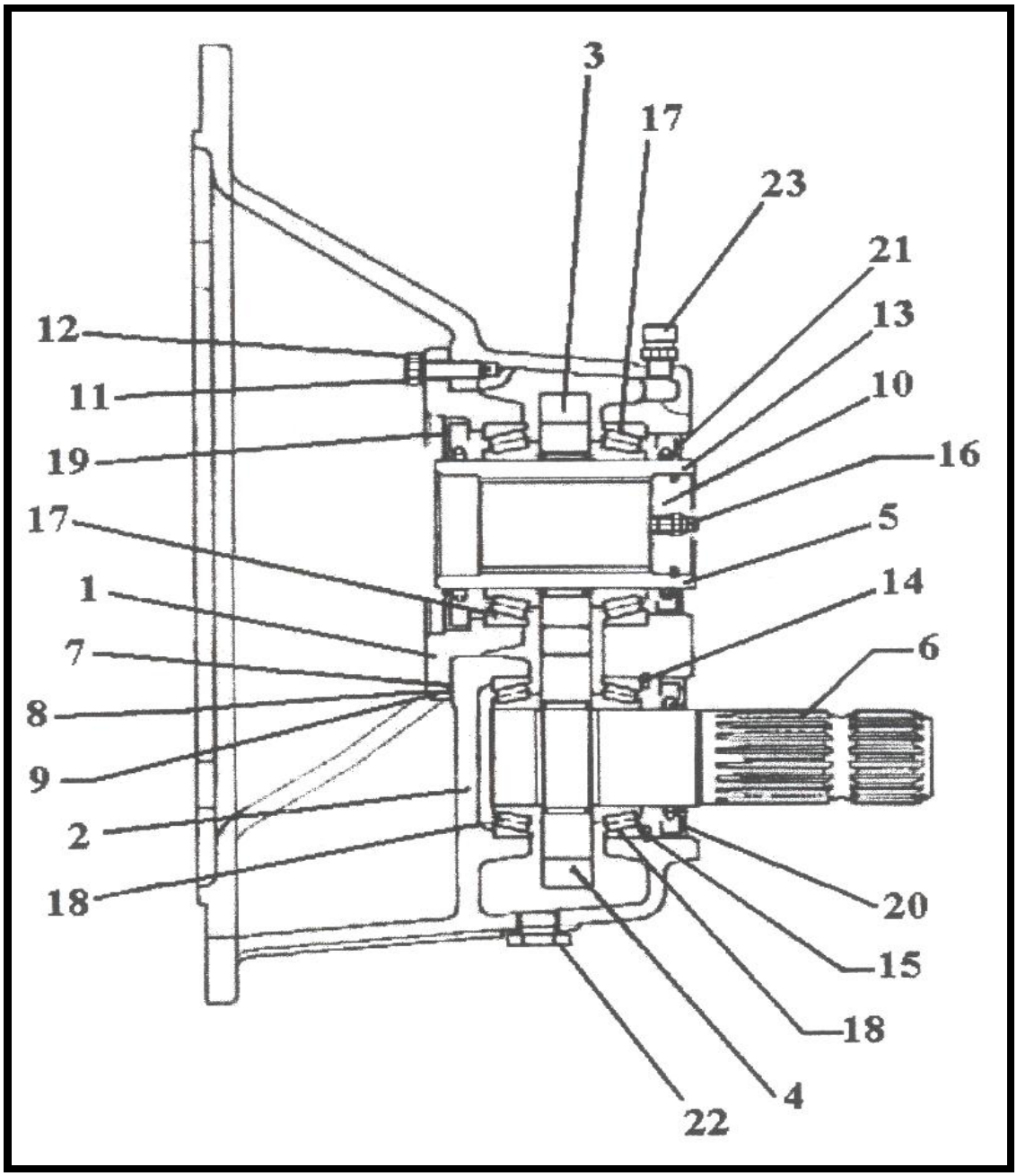

RIGHT HAND GEARBOX

PARTS LIST

Ref#	BMI#	Description	Qty.
	10420	Right Hand Gearbox	1
1	10480	Flange Output Shaft	1
2	10481	Casting	1
3	10482	Output Gear	1
4	10483	Input Gear	1
5	10484	1 3/4” Internal Output Shaft	1
6	10485	1 3/4” Input Shaft	1
7	10486	Output Shaft Flange Shim	1
8	10487	Output Shaft Flange Shim	1
9	10488	Output Shaft Flange Shim	1
10	10489	Output Shaft Cover	1
11	10490	Bolt M8 x 25 x 1.25 cl. 8.8	6
12	10491	Washer 8.2 x 14.8 x 1.6	6
13	10492	Snap Ring	1
14	10493	Snap Ring 1.75 x 2.5	1
15	10494	Shims	1
16	10495	Grease Fitting M8 x 1.25	1
17	10496	Taper Roller Bearing	2
18	10497	Taper Roller Bearing	2
19	10498	Oil Seal 60 x 100 x 10	1
20	10499	Oil Seal 45 x 75 x 10	1
21	10500	Oil Seal 60 x 85 x 10	1
22	10501	Drain Plug	1
23	10502	Breather Plug	1

FINE CHOP OPTION (SIDE MOUNT)

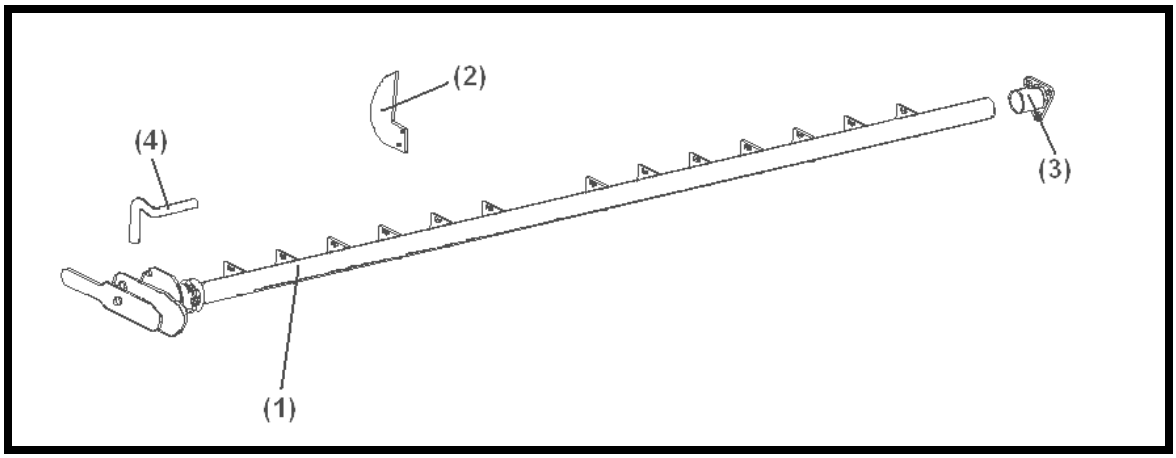

FINE CHOP OPTION (SIDE MOUNT)

PARTS LIST

Ref#	BMI#		Description	Qty.
	12499	19398	Fine Chop Option (Side Mount)	
1	11771	17409	Handle and Pipe Assembly	1
2	10404		Knife	14
Not Shown	11810		1/4” x 1” NC Bolts	28
Not Shown	15402		1/4” NC Locknut	28
3	13450		Sleeve Bracket	1
Not Shown	13806		3/8” x 1” NC Bolt	7
Not Shown	11818		3/8” Serrated Flange Nut	7
4	10231		Plated Handle	1
Not Shown	10297		Rubber Handle	1
Not Shown	10302		3/16” x 1 1/4” Roll Pin	1
Not Shown	10301		Compression Spring	1
Not Shown	12792		Split Collar	1

MODELS WITH SERIAL # BK3102 AND BELOW

FINE CHOP OPTION

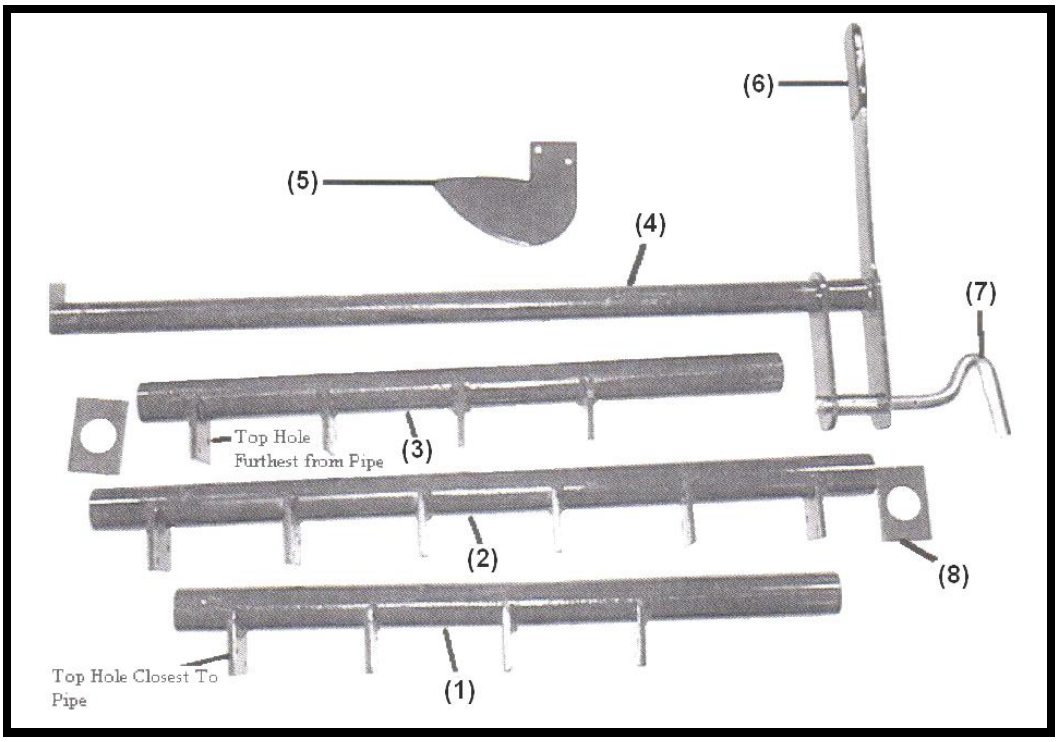

FINE CHOP OPTION

PARTS LIST

Ref#	BMI#	Description	Qty.
1	10525	End Knife Holder	1
2	10526	Middle Knife Holder	1
3	10527	End Knife Holder	1
4	10523	Handle w/Pipe	1
5	10404	Knife	14
6	10297	Rubber Handle	1
7	10231	Plated Handle	1
Not Shown	10302	3/16” x 1 1/4” Roll Pin	1
8	10524	Rectangular Spacer	2
Not Shown	10301	Compression Spring	1
Not Shown	13806	3/8” x 1” NC Bolt	4
Not Shown	13802	3/8” NC Locknut	4
Not Shown	11810	1/4” x 1” NC Bolt	28
Not Shown	15402	1/4” NC Locknut	28

SPRING ASSISTED DEFLECTOR

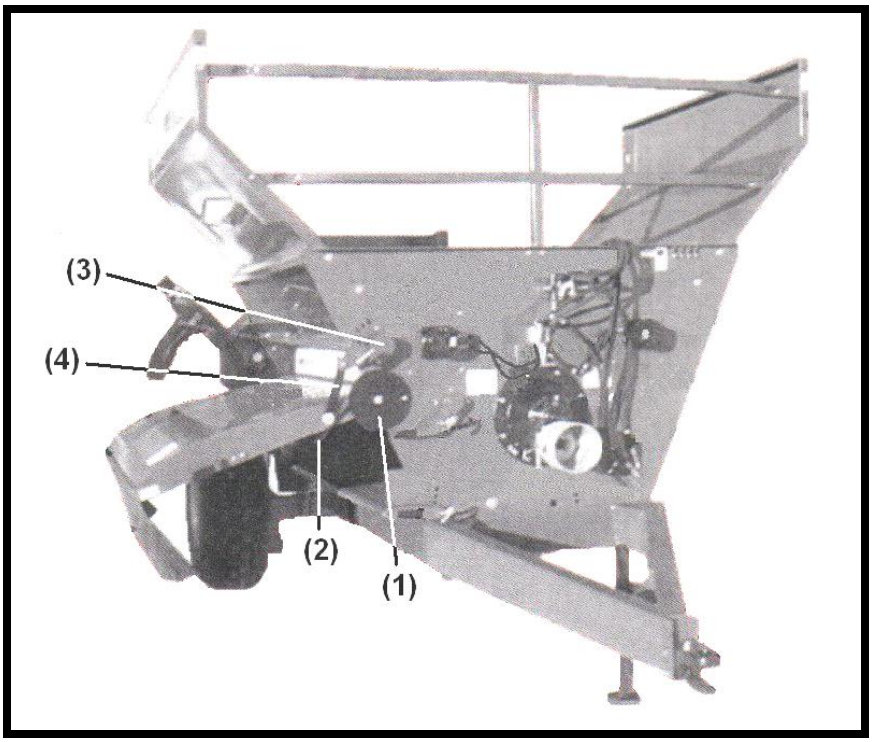

SPRING ASSISTED DEFLECTOR

PARTS LIST

Ref#	BMI#	Description	Qty.
1	10474	Spring Plate	2
Not Shown	14461	1/2” x 1 1/2” NC Bolt	2
Not Shown	15403	1/2” x 1 3/4” NC Bolt	2
Not Shown	16345	1/2” Fender Washer	2
Not Shown	10239	Bushing 1/2” x 1 1/4”	2
Not Shown	10506	Spring Bushing 9/16” x 2” x 1/2”	2
Not Shown	10507	Spacer 5/8” x 3/4” x 1/2”	2
Not Shown	14443	1/2” NC Locknut	2
Not Shown	10278	1/2” Serrated Flange Nut	2
2	10422	Left Spring Rear on RH Machine	1
	10423	Right Spring on Front on the RH Machine	1
3	10830	Lift Assembly (includes next 3 items)	1
Not Shown	10231	Plated S Handle	1
Not Shown	10301	Compression Spring	1
Not Shown	10302	Roll Pin	1

Ref#	BMI#	Description	Qty.
Not Shown	**13806**	**3/8” x 1” NC Bolt**	**6**
Not Shown	**11818**	**3/8” Serrated Flange Nut**	**6**
4	**10475**	**Linkage, Main Deflector**	**2**
Not Shown	**10512**	**Spring Guide**	**2**
Not Shown	**14461**	**1/2” x 1 1/2” NC Bolt**	**2**
Not Shown	**10278**	**1/2” Serrated Flange Nut**	**2**
Not Shown	**16345**	**1/2” Fender Washer**	**4**
Not Shown	**10239**	**Bushing 1/2” x 1 1/4”**	**4**

*** Replaces items 16 – 18 on Bale King, upto Serial #BK3103 in *External Parts and Controls* section**

HYDRAULIC SCHEMATICS

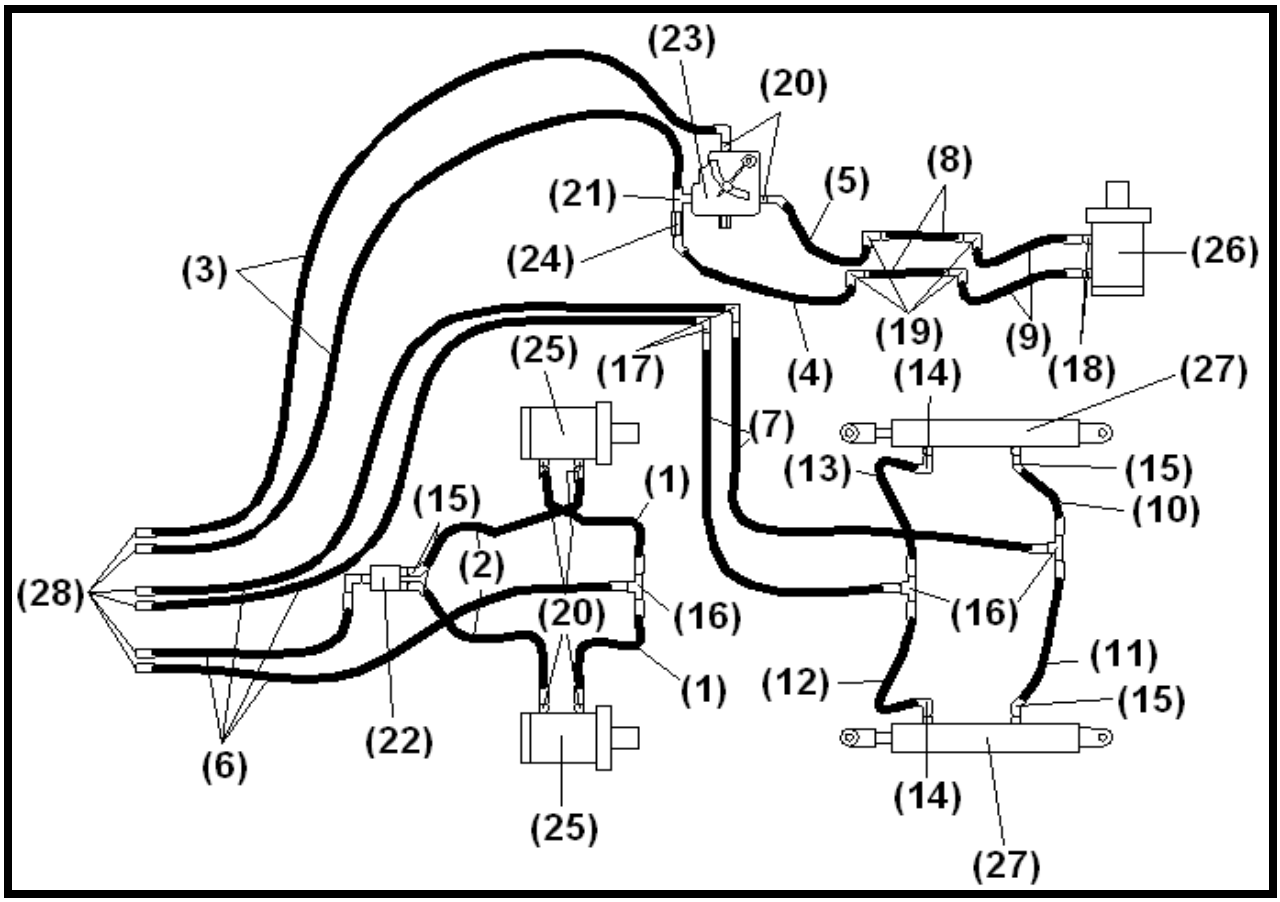

PARTS LIST

Ref#	BMI#	Description	Qty.
1	10198	Hose - 18” OAL 6FJX – 8FJX	2
2	10197	Hose - 21” OAL 6FJX – 8FJX	2
3	10429	Hose - 102” OAL 8MP – 8FJX90	2
4	10430	Hose - 39” OAL 8FJX – 8FJX45	1
5	10431	Hose - 35” OAL 8FJX – 8FJX45	1
6	10195	Hose - 120” OAL 8MP – 6FJX	4
7	10190	Hose - 80” OAL 6FJX – 6FJX	2
8	10432	Hose - 82” OAL 8FJX – 8FJX	2
9	10532	Hose - 92” OAL 8FJX – 8FJX45	2
10	10338	Hose - 78” OAL 6FJX – 6FJX	1
11	10334	Hose - 52” OAL 6FJX – 6FJX	1
12	10331	Hose - 68” OAL 6FJX – 6FJX	1

Ref#	BMI#	Description	Qty.
13	10337	Hose - 98” OAL 6FJX – 6FJX	1
14	10200	Adapter – 8MB – 6MJ90	3
15	11725	Adapter – 8MB – 6MJ45	4
16	10188	Adapter – 6MJBH – 6MJT	3
17	10187	Adapter – 6MJ – 6MJ90BH	2
18	10561	Adapter – 8MB – 8MJ	2
19	10531	Adapter – 8MJBH – 8MJ90	4
20	10161	Adapter – 10MB – 8MJ	6
21	10530	Adapter – 10MBL – 8MB – 8MJT	1
22	11742	Splitter	1
23	10455	Flow Control	1
24	12171	Check Valve, 8FB – 8MJ	1
25	10045	Hydraulic Beater Motors	2
Not Shown	10048	Seal Kit	1
26	10533	Auger Motor	1
Not Shown	10249	Seal Kit	1
27	10528	Fork Hydraulic Cylinder (See Page 15)	2
28	10167	Pioneer Tips	4

Optional Attachments Units with Spring Assist Deflector

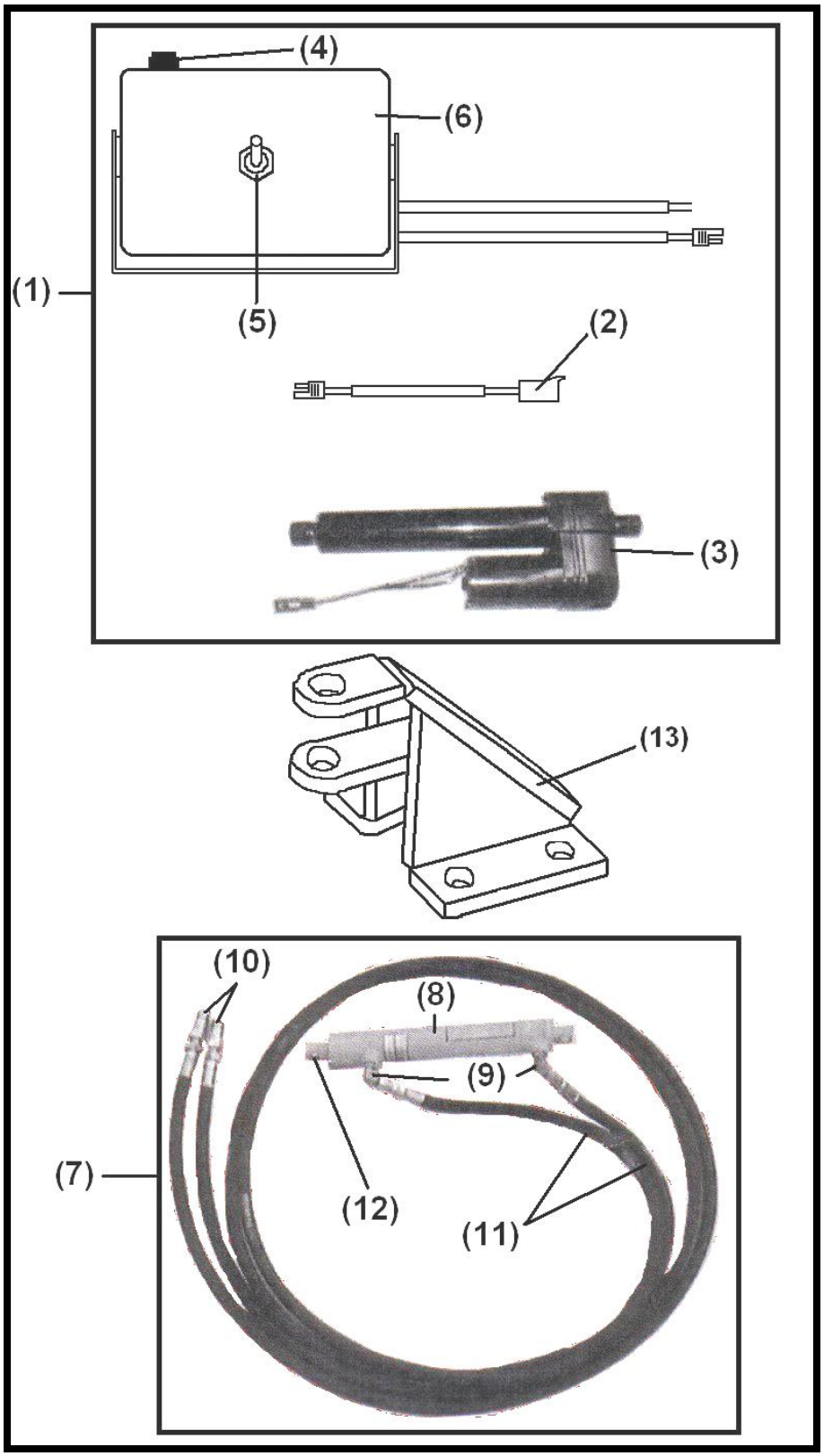

Optional Attachments Units with spring Assist deflector

PARTS LIST

Ref#	BMI#	Description	Qty.
1	10307	Electric Lift Attachment (Side Deflector)	1
2	10309	Cable 13’	1
3	10311	Electric Actuator	1
4	10312	Fuse Holder	1
Not Shown	10313	Fuse AGC 25	1
5	10314	3 – Way Switch	1
6	10315	Box Assembly w/ Harness	1
7	10316	Hydraulic Lift Attachment	1
8	10317	Hydraulic Cylinder Assembly (See Page 16)	1
Not Shown	10318	Seal Kit	1
9	10201	Adaptor – 6MB – 6MJ90	2
10	10167	Pioneer Male Tips	2
11	10320	Hose – 120”	2
12	15396	1/2” x 3” NC Bolt	1
Not Shown	10239	1/2” x 1 1/4” Plated Bushing	2
Not Shown	13804	1/2” x 2” NC Bolt	1
Not Shown	14443	1/2” NC Locknut	2
13	10516	Bracket Hydraulic and Electric Lift	1
Not Shown	13806	3/8” x 1” NC Bolt	4
Not Shown	13802	3/8” NC Locknut	4
Not Shown	13559	Transport Safety Latch, Includes following items:	
	13560	Safety Latch	1
	13233	Lynch Pin	1
	13232	1/2” x 2 1/4” NC Bolt	1
	13231	1/2” x 2 1/2” NC Stabilizer Pin	2
	10278	1/2” Serrated Flange Nut	6
	13194	Decal, Transport Safety Lock	1